This drawing contains design and other information which is the property of SpaceAge Control, Inc. Except for rights expressly granted by contract to the United States Government, this drawing and data disclosed herein or herewith is not to be reproduced, used, or disclosed in whole or in part to anyone without the written permission of SpaceAge Control, Inc.

REVISIONS			
REV	DESCRIPTION	DATE	APPROVED

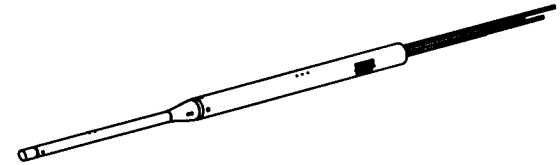

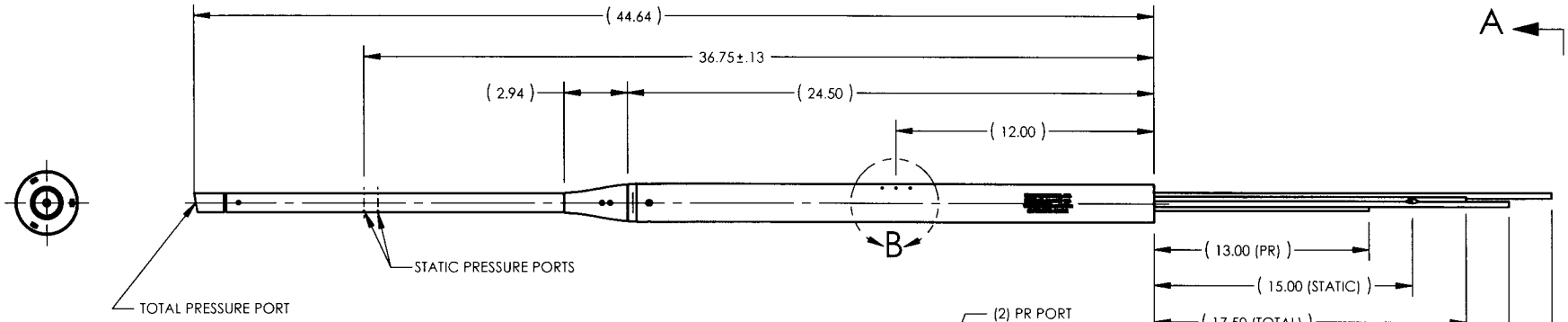

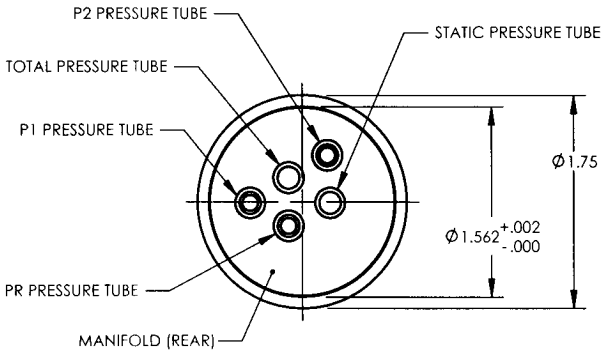

SECTION A-A
SCALE 1 : 1

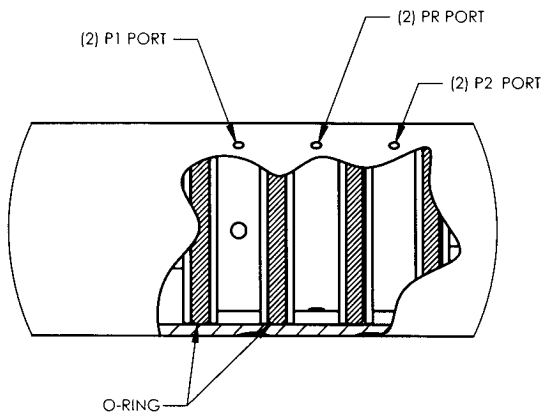

DETAIL B
SCALE 1 : 1

APPROVED
MASTER DRAWING
PRODUCTION RELEASE
NOT VALID WITHOUT THIS SIGN
DATE: 8-19-02 BY:

NEXT ASSY	USED ON
APPLICATION	

UNLESS OTHERWISE SPECIFIED DIMENSIONS ARE IN INCHES TOLERANCES ARE:
DECIMALS: X.X ± 0.03, X.XX ± 0.01, X.XXX ± 0.005
ANGLES: X° ± 30'
DO NOT SCALE DRAWING
MATERIAL --
FINISH --
CAD GENERATED DRAWING. DO NOT MANUALLY UPDATE

PROJECT 104		
APPROVALS		DATE
DRAWN	[illegible]	8-19-02
CHECKED	S. GATES	8-19-02
ENGR	[illegible]	8-19-02
MFG		

SpaceAge Control, Inc.

STRAIGHT-NOSE AIR DATA BOOM

SIZE	CAGE CODE	DWG. NO.	REV.
B	34851	100600-03	

SCALE 1:5 CAD FILE: SHEET 1 OF 1